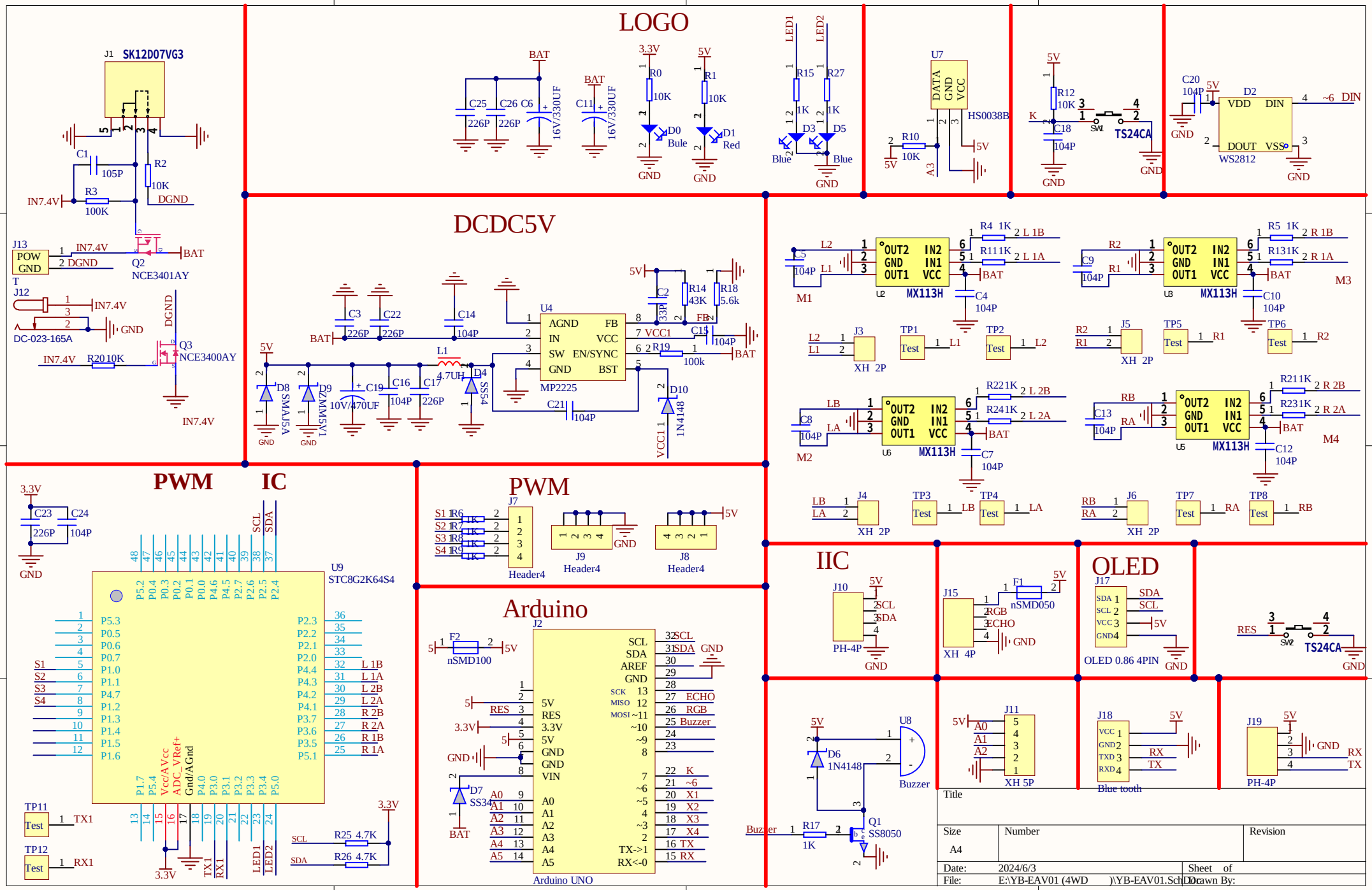
LOGO
DCDC5V
PWM IC
PWM
Arduino
IIC
OLED
J1 SK12D07VG3
Q2 NCE3401AY
Q3 NCE3400AY
J13 POW GND
J12
DC-023-165A
U4 MP2225
U9 STC8G2K64S4
J7 Header4
J9 Header4
J8 Header4
J2 Arduino UNO
U7 HS0038B
D2 WS2812
TS24CA
M1
M2
M3
M4
MX113H
J10 PH-4P
J15 XH 4P
J17 OLED 0.86 4PIN
J11 XH 5P
J18 Blue tooth
J19 PH-4P
U8 Buzzer
Q1 SS8050
Title
Size A4
Number
Revision
Date: 2024/6/3
Sheet of
File: E:\YB-EAV01 (4WD )\YB-EAV01.SchDoc
Drawn By: